JOINT FINAL EVENT

PaREGEn + PEMs 4Nano

Development of Sub-23nm PN Measurement Technology

This work presents the development and calibration steps of two solid particle counting systems for sub-23nm measurements at their desired purposes:

- Sampling along the exhaust aftertreatment system supporting the engine development process and emissions reduction
- Constant Volume Sampling (CVS) for Type Approval Certification (*sub-23nm legislation currently under discussion)
- Portable Emissions Measurement method for Particle Number (PEMS-PN) for Real Driving Emissions.

HORIBA MEXA-2110SPCS

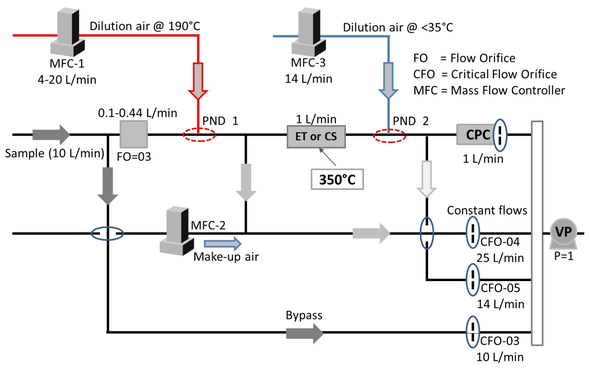

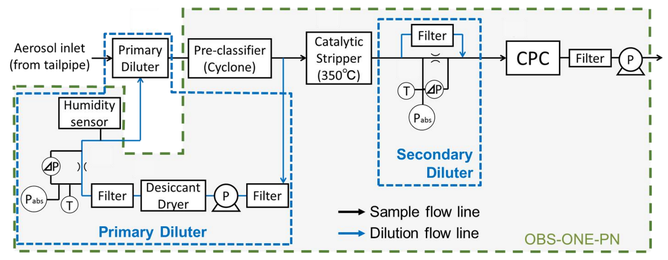

HORIBA OBS-ONE-PN10

Technology Modifications

CPC & Evaporation Tube (ET)

The condensation particle counter (CPC) has been modified and re-calibrated. The baseline for optimization is a TSI model CPC-100 as used in Horiba MEXA2X00-SPCS series. The temperatures inside the CPC have been adjusted:
Saturator: T=39°C; Condenser: T=19°C
In addition, an evaporation tube was replaced by a catalytic stripper.

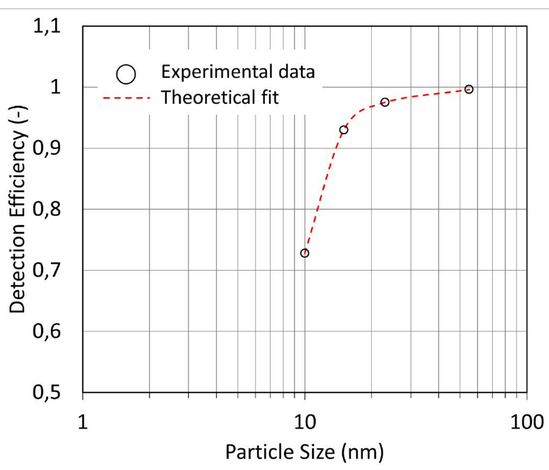

CPC & Catalytic Stripper (CS)

HORIBA OBS-ONE PN system includes a TSI modified CPC which is optimized for the operation in an on-board application. For sub-23nm measurements the temperatures of the CPC have been adjusted:
Saturator: T=36°C; Condenser: T=20°C
In addition, the CS has been optimized for particle penetration resulting in a 10-15% solid particle penetration increase at 10nm. Even at 8 nm a penetration efficiency greater than 60% has been achieved.

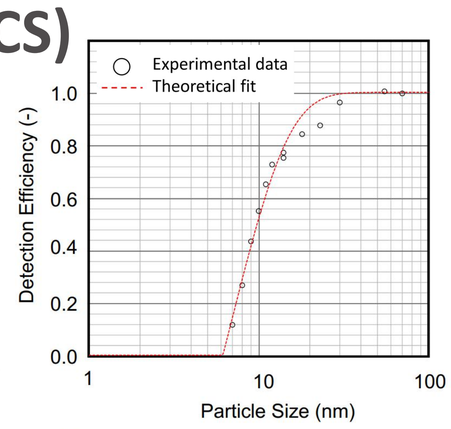

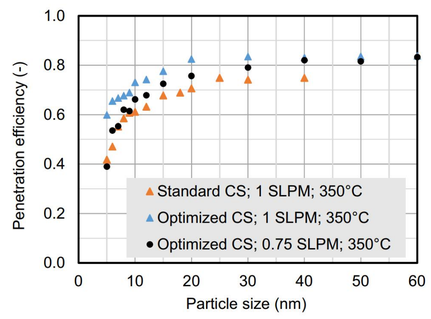

Particle Concentration Reduction Factor

The Particle Concentration Reduction Factor (PCRF) ratios for the modified laboratory system are within original PMP recommendations. Based on an initial value of 100% at 100nm, the PCRF ratios are below 130% at 30nm and below 120% at 50nm. In addition, at 15nm the ratios stay well below 200% with the calibration aerosol of sodium chloride (NaCl).

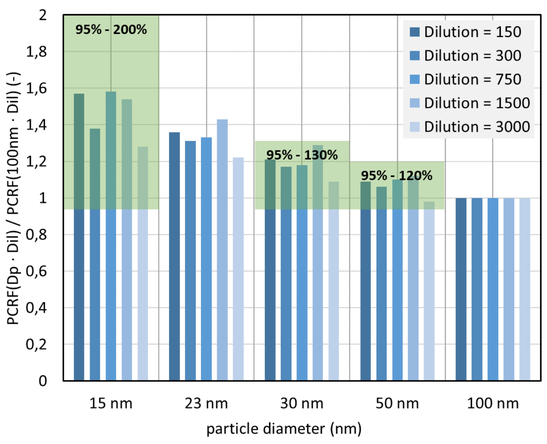

System Efficiency & PCRF

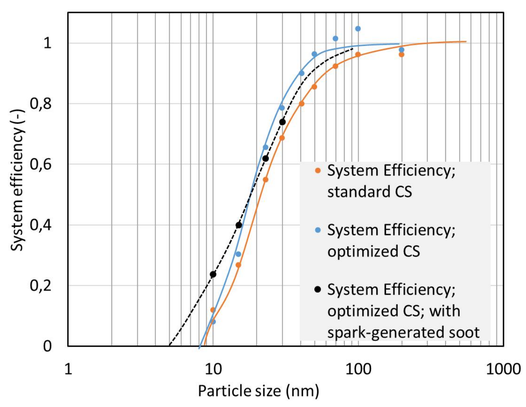

The calibration for the entire system efficiency is done with soot-like material. Different calibration aerosols deliver slightly different results. For flame generated CAST soot a good thermal conditioning is necessary. With spark generated soot 20% detection efficiency could be achieved at 10nm.

CALIBRATION PROCEDURE & FLOW SCHEMATICS

Model aerosol particles are generated by means of a NaCl particle generator and subsequent size classification. A differential mobility analyser (DMA) is used to get a monodisperse aerosol in a size range required by the respective calibration procedure for the PCRF.

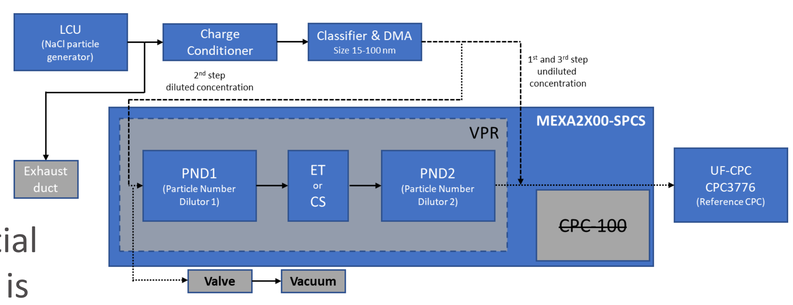

The system efficiency of the PEMs4Nano PEMS prototypes have been measured with the measurement system shown on the right:

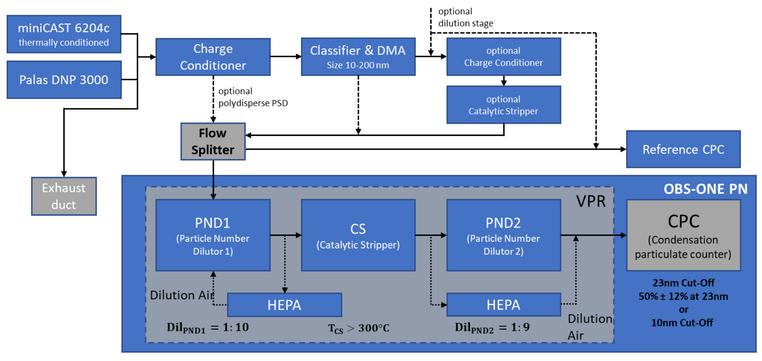

CONCLUSION

Two different measurement systems have been developed within the PEMs4Nano project. Both devices have been checked regarding their VPR efficiency and passed the test with Tetracontane particles. Due to the lack of any standard for the exact PCRF-definition during sub-23 nm measurements, it was decided to initially correct for particles losses like current 23nm systems due to comparison reasons.

PEMs 4Nano HORIBA BOSCH Invented for life CMCL Innovations TS UNDERSTANDING, ACCELERATED UNIVERSITY OF CAMBRIDGE Université de Lille Applus IDIADA HORIBA Scientific UNIRESEARCH

www.PEMs4Nano.eu

This project has received funding from the European Union's Horizon 2020 research and innovation programme under Grant Agreement no. 724145